嘉尼企業股份有限公司CANAL ELECTRONIC CO.,LTD.

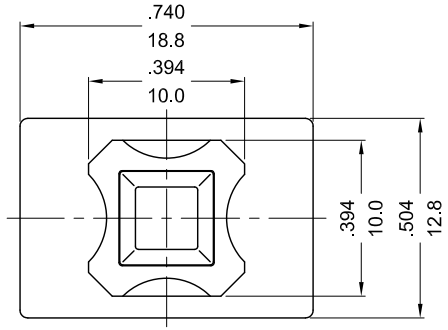

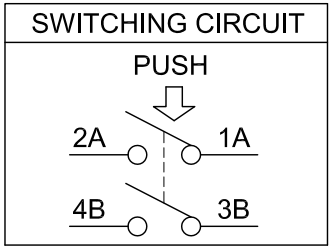

SPECIFICATION MODEL :"PS-5" SERIES

RATING:16A 125/250VAC (UL/CUL)
16(4)A 250V ~ T125/55 (VDE/ENEC/CQC)
CONTACT RESISTANCE:20mΩ INITIAL (MAX)
INSULATION RESISTANCE:500VDC - 100MΩ (MIN)
WITHSTAND VOLTAGE:1,000VAC 1 MINUTE.

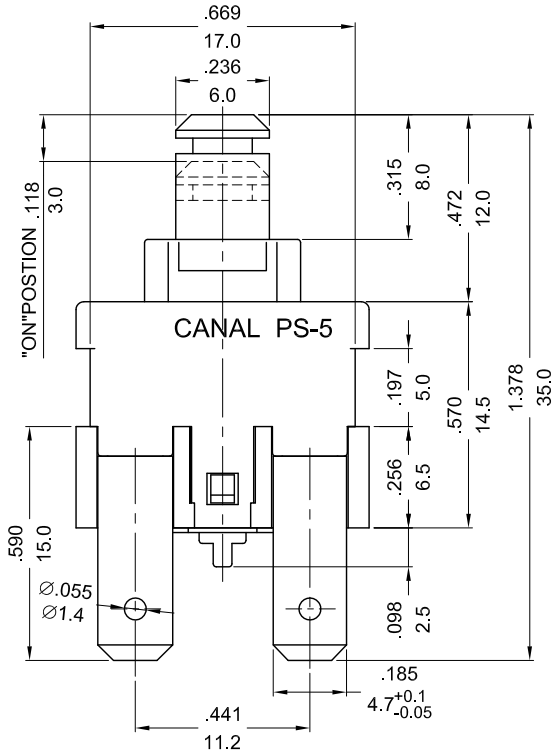

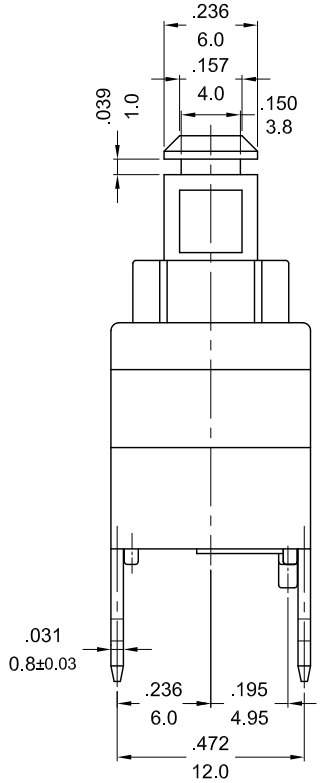

NOTE: TOLERANCES UNLESS OTHERWISE SPECIFIED:± .012/0.3 (in/mm)

REVISION	DESCRIPTION	REVISED BY	TOLERANCES				ANGLE ½°	UNIT	mm	PART NAME	PS-5 SPEC DRAWING	DWG NO
4 2009.05.13	依實物修正耳扣位置	劉義正	DRAWN BY	王智敏	DESIGNED BY	馮紅崗	SCALE	2/1				S0477F
3 2008.10.07	增加馬力刻字標示，取消CSA	劉義正										
6 2012.04.12	依最新出圖要求，整理圖面，重新出圖	向 宏	CHECKED BY	2012.04.16 09:17:42 +08'00'	APPROVED BY	2012.04.16 09:17:54 +08'00'	DATE	2002.11.28		PART NO	PS-5-210-L0	
5 2010.02.10	整理圖面，重新出圖	向 宏										